REVISIONS				
ZONE	REV.	DESCRIPTION	DATE	APPROVED
	–	ORIGINAL RELEASE JOB# 406134–4	7/5/04	

DESCRIPTION:

AMC MODEL NUMBER SWN–1140–4DT–STANDARD OPTION: 300M27 IS A SINGLE POLE FOUR THROW, ABSORPTIVE PIN DIODE SWITCH DESIGNED FOR THE 0.3 GHz TO 26.5 GHz FREQUENCY RANGE WITH LOW INSERTION LOSS, +27 dBm RF POWER AND WITH INTEGRAL TTL DRIVER.

SPECIFICATIONS:

- FREQUENCY: 0.3 GHz TO 26.5 GHz
- INSERTION LOSS: 0.3 GHz TO 18 GHz: 3.00 dB MAXIMUM
  18 GHz TO 26.5 GHz: 4.5 dB GOAL
  6.5 dB MAXIMUM
- ISOLATION: 0.3 GHz TO 26.5 GHz: 60 dB MINIMUM
- VSWR: ABSORPTIVE IN/OUT: 2.2:1
  ABSORPTIVE OUT/OFF: 2.2:1
- SPEED: DELAY ON: 75ns TYPICAL, 100ns MAXIMUM
  DELAY OFF: 75ns TYPICAL, 100ns MAXIMUM
- POWER INPUT: (CW)+27dBm (STANDARD), +10 dBm (HIGH SPEED)
- SURVIVAL POWER: 1 WATT CW, 10 WATTS PEAK 1 usec
- CONTROL: TTL LOGIC "0"=ON "1"=OFF
- POWER SUPPLY: +5V @ 200 mA MAXIMUM
  –15V @ 100 mA MAXIMUM

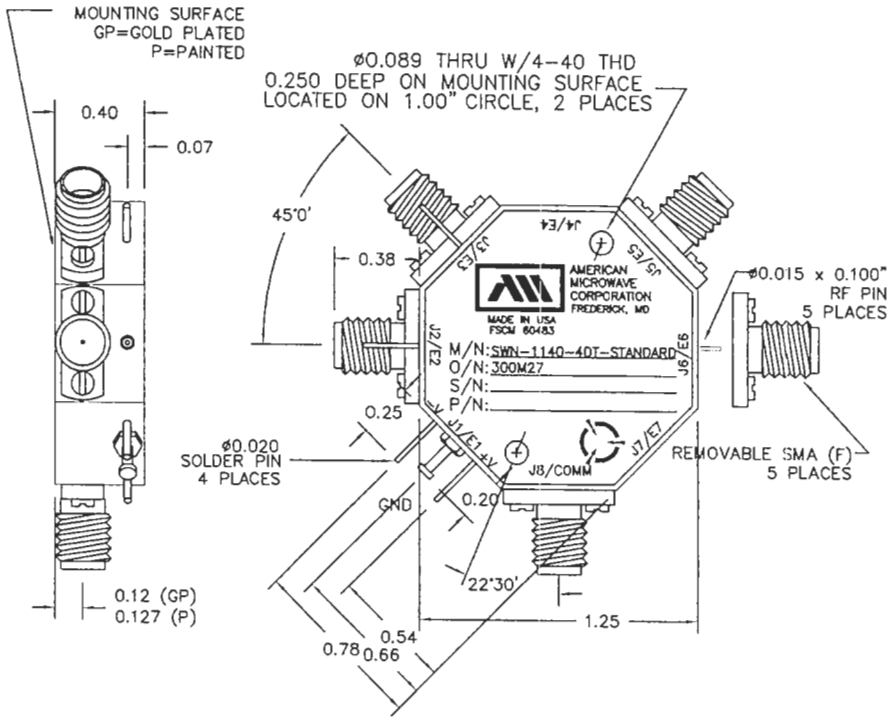

BLOCK DIAGRAM

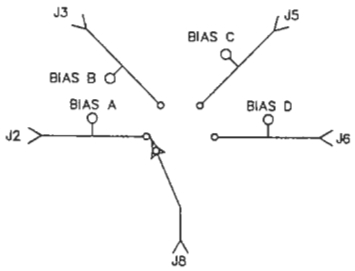

ENVIRONMENTAL RATINGS

- **TEMPERATURE** ..... –55°C TO +85°C (OPERATING)
  –65°C TO +125°C (STORAGE)
- **HUMIDITY** ..... MIL–STD–202F, METHOD 103B COND. B
- **SHOCK** ..... MIL–STD–202F, METHOD 213B COND. B
- **VIBRATION** ..... MIL–STD–202F, METHOD 204D COND. B
- **ALTITUDE** ..... MIL–STD–202F, METHOD 105C COND. B
- **TEMPERATURE CYCLE** ..... MIL–STD–202F, METHOD 107D COND. A

NOTE: SPECIFICATIONS WILL VARY OVER OPERATING TEMPERATURE
NOTE: THE ABOVE SPECIFICATIONS ARE SUBJECT TO CHANGE OR REVISION

ALL DIMENSIONS ARE IN INCHES
TOLERANCES:
X.XX ±0.020
X.XXX ±0.010

AMERICAN MICROWAVE CORPORATION
7311-G GROVE ROAD
FREDERICK, MARYLAND 21704 USA
TEL: 301-662-4700 FAX: 301-662-4938
WEBSITE: www.americanmicrowavecorp.com
E-MAIL: sales@americanmicrowavecorp.com
ISO 9001:2000 CERTIFIED

APPROVALS	DATE
DRAWN JDJ	7/6/04
REDRAWN JDJ	8/17/04
ISSUED CA	8/31/07

TITLE: PRODUCT FEATURE
SWN–1140–4DT–STANDARD
OPTION: 300M27
0.3 TO 26.5 GHz SINGLE POLE FOUR THROW SWITCH

SIZE	FSCM NO.	DWG NO.	REV.
A	60483	100–7034	–

SCALE N:S SHEET 1 OF 3